Palm Keyboard to Morse output circuit schematic

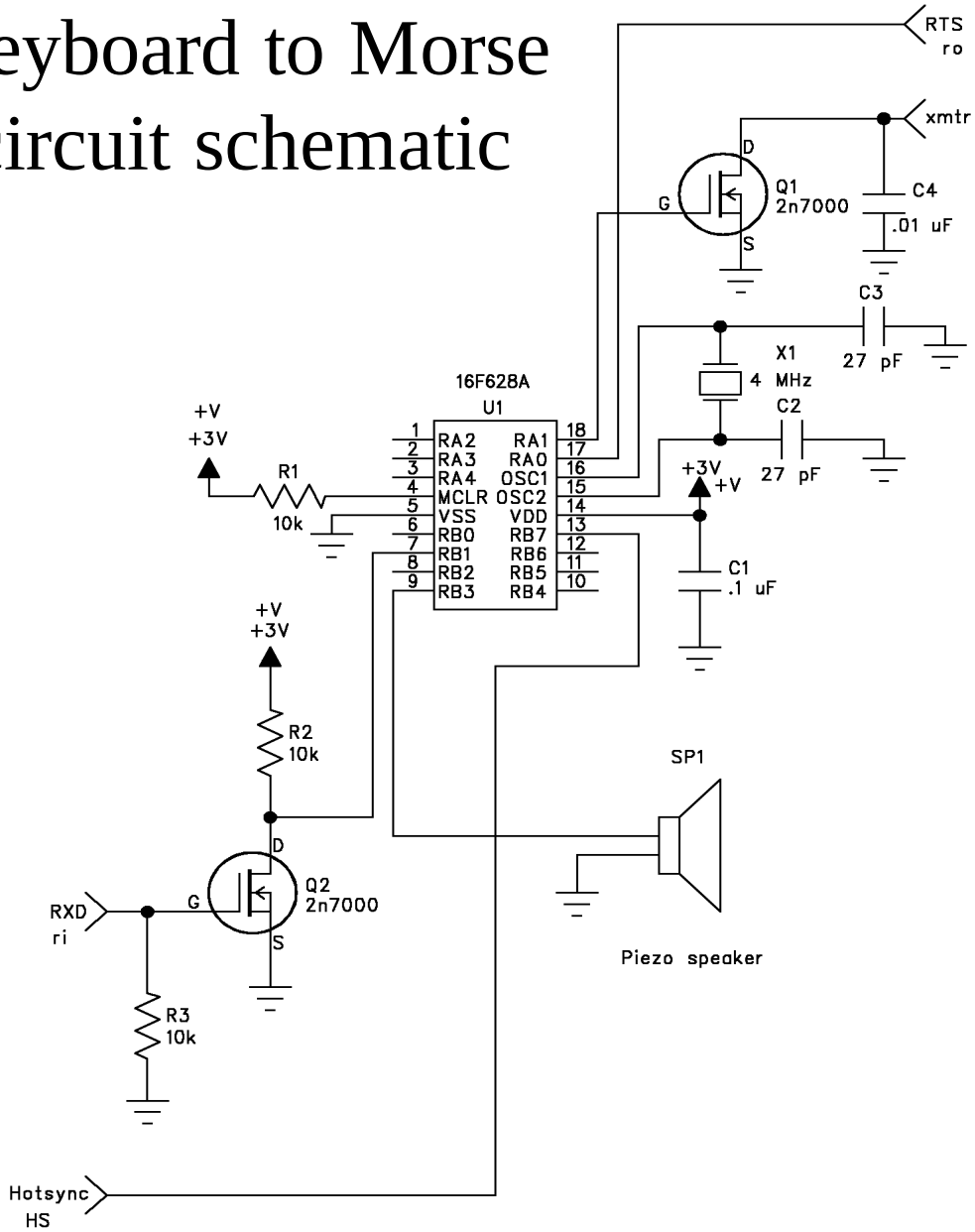

Jackson Harbor Press
RR1, Box 91C
Washington Island, WI 54246
http://jacksonharbor.home.att.net/
jacksonharbor@att.net

Copyright © 2004 by Charles J. Olson